Introduction to the Internet and Data Networking

Doug Dooley
dougdooley@yahoo.com
http://www.geocities.com/dougdooley/

Goals of the Course

- **Week 1:** Gain a basic understanding of how the Internet was formed.
- **Week 2:** Understand the following networking concepts: LAN/WAN, Seven Layer OSI Model, TCP/IP.
- ***Week 3:* Gather an overview of the various core technologies of Data Networking**
- **Week 4:** Understand what companies, agencies, and organizations are helping to build the Internet today.
- **Week 5:** Have an ability to discuss the pros/cons of the Internet and why it will change the way we work, live, play, and learn.

Common Concepts for Ethernet Based - TCP/IP

- IP Address: Logical Address (Layer 3 of the OSI Model: Network)

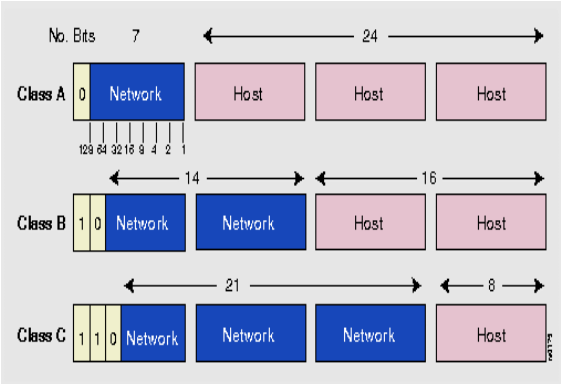

Address Class	First Octet in Decimal	High-Order Bits
Class A	1 – 126	0
Class B	128 – 191	10
Class C	192 – 223	110
Class D	224 – 239	1110
Class E	240 – 254	1111

Common Concepts for Ethernet Based - TCP/IP

- MAC Address
  - Hardware Address
  - Layer 2 of the OSI Model: Data Link
- IEEE 802.3/Ethernet
  - Physical transmission format
  - Layer 1 of the OSI Model: Physical
  - 10BASE-T (CAT 5) – (page 196-7 of text)
  - Ethernet's name & meaning (page 192 of text)

Routed vs. Routing Protocols

- Routed protocols occur primarily at the upper four layers of the OSI Model: Application, Presentation, Session, Protocol.
- Routed protocols are transported by Routing protocols across an internetwork.
- Routing protocols determine optimal paths through internetworks using routing algorithms, and transport information across these paths.
- Routing protocols function at the network layer (Layer 3) of the OSI Model: Network.

Common Routed Protocols

- **Internet Protocol (IP) stack**, also known as TCP/IP, is a suite of popular communication protocols used in the global Internet.
- **IBM SNA** is a large, complex, feature-rich network architecture, including a protocol stack, developed in the 1970s by IBM.
- **Novell NetWare** is a network operating system (NOS) and protocol suite that provides transparent remote file access and other distributed network services.
- **AppleTalk** is a distributed client-server networking system, including a protocol stack, designed by Apple Computer.
- **DECnet** is a group of data communications products, including a protocol suite, developed by Digital Equipment Corporation.
- **OSI** protocols are a series of data networking protocols developed as an international standard by the ISO.
- **Banyan VINES** is a distributed NOS and protocol suite for personal computers using a client-server architecture.
- **XNS** (Xerox Network Systems) protocols were created by Xerox Corporation and are used across a variety of communication media.

IP Protocol Suite

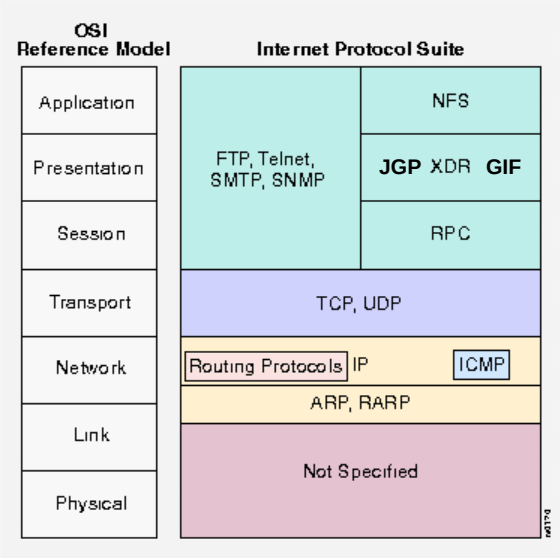

Routing – Algorithms

- The goal of a routing algorithm is to route a packet from one point in the network to another point in the network through some set of intermediate routers without "looping," a situation in which a packet is forwarded across the same link several times.
- There are two general algorithms for computing: *distance-vector* and *link-state*.

Distance Vector Routing Protocols

- Distance Vector Algorithms are based on the "*Bellman-Ford*" Algorithm (page 172 of text).
- **RIP** – Routing Information Protocol Version 1
  - Derived from Xerox Network System's (XNS) routing protocol, which was also called RIP. It was bundled with BSD UNIX in 1982 as part of the TCP/IP protocol suite and became the de facto standard for IP routing.
- **RIPv2** - Routing Information Protocol Version 2
  - The following features were added: Authentication, Interpretation of IGP and BGP Routes, Next Hop Field, Multicasting.

Link-State Routing Protocols

- Link-State Algorithms are based on Dijkstra's Shortest Path First Algorithm (page 174 of text).
- Link State Advertisements (LSA) are sent as updates to all other devices including names and cost-metric value of its neighbors.
- Protocols Include: OSPF (Open Shortest Path First), OSI's IS-IS, and Netware's Link Services Protocol.

Common Circuit Speeds

DIGITAL

- DS-0: 64kbps
- DSL: 144k, 384k, 768k, 1.5M, others
- ISDN(BRI): 192kbps
- ISDN(PRI): 1.544Mbps
- T1(DS-1): 1.544Mbps
- T3(DS-3): 44.736Mbps (30 x T1)

SONET

- *OC-n: 51.84Mbps x n*
- OC-3: 155.52Mbps
- OC-12: 622.08Mbps
- OC-48: 2.49Gbps
- OC-192: 9.95Gbps

Common WAN Technologies

- Asynchronous Transfer Mode (ATM)
- Integrated Services Digital Network (ISDN)
- Point-to-Point Protocol (PPP)
- Frame Relay
- X.25
- Switched Multimegabit Data Service (SMDS)
- High-Speed Serial Interface (HSSI)
- Synchronous Data Link Control (SDLC)

Conclusion:

- TCP/IP Concepts: *IP Address, MAC Address, Ethernet/IEEE802.3*
- Routed vs. Routing Protocols
- Common Routed Protocols
- Review: IP Protocol Suite
- Routing Algorithms
- Common Routing Protocols: DV & LS
- Common Circuit Speeds
- Common WAN Technologies