# Introduction to the Internet and Data Networking

Doug Dooley
dougdooley@yahoo.com
http://www.geocities.com/dougdooley/

# Goals of the Course

- **Week 1:** Gain a basic understanding of how the Internet was formed.
- **Week 2:** Understand the following networking concepts: LAN/WAN, Seven Layer OSI Model, TCP/IP.
- ***Week 3:* Gather an overview of the various core technologies of Data Networking**
- **Week 4:** Understand what companies, agencies, and organizations are helping to build the Internet today.
- **Week 5:** Have an ability to discuss the pros/cons of the Internet and why it will change the way we work, live, play, and learn.

# Common Concepts for Ethernet Based - TCP/IP

- IP Address: Logical Address (Layer 3 of the OSI Model: Network)

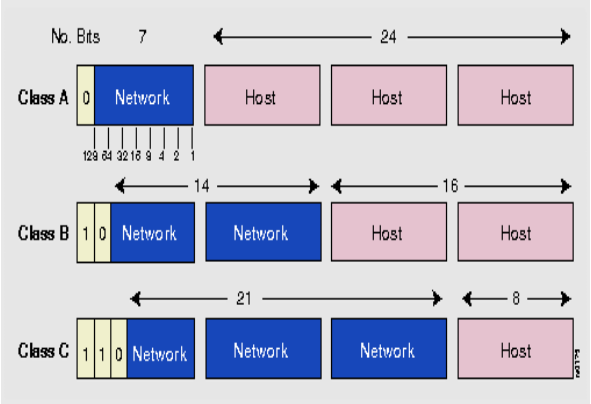


| Address Class | First Octet in Decimal | High-Order Bits |
|---|---|---|
| Class A | 1 – 126 | 0 |
| Class B | 128 – 191 | 10 |
| Class C | 192 – 223 | 110 |
| Class D | 224 – 239 | 1110 |
| Class E | 240 – 254 | 1111 |

Class A:

Class B:

Class C:

# Common Concepts for Ethernet Based - TCP/IP

- MAC Address
  - Hardware Address
  - Layer 2 of the OSI Model: Data Link
- IEEE 802.3/Ethernet
  - Physical transmission format
  - Layer 1 of the OSI Model: Physical
  - 10BASE-T (CAT 5) – (page 196-7 of text)
  - Ethernet's name & meaning (page 192 of text)

IEEE 802.3 address consists of 48 bits, represented as 12 hexadecimal digits (0-9, A-F) partitioned into 6 groups of two

Example: 08:00:20:01:D6:2A [4 bits per digit = 4 x 12 = 48 bits]

SUN Manufacture – 08:00:20 Serial Number – 01:D6:2A

10BASET (CAT 5, RJ45) = meaning?

Signaling Rate (Mbps) – Band (Base or Broad) – Length (meters) or Cable Type

10 Mbps - Baseband – (T = Twisted Pair)

Cat5 = Category 5 Cable UTP for Ethernet, Fast-E. RJ45 is the type of connector.

Ethernet gets it's name from the old electromagnetic theoretical substance "aluminiferous ether," which was formerly believed to be the invisible universal element that bound everything together in the universe.

# Routed vs. Routing Protocols

- Routed protocols occur primarily at the upper four layers of the OSI Model: Application, Presentation, Session, Protocol.
- Routed protocols are transported by Routing protocols across an internetwork.
- Routing protocols determine optimal paths through internetworks using routing algorithms, and transport information across these paths.
- Routing protocols function at the network layer (Layer 3) of the OSI Model: Network.

# Common Routed Protocols

- **Internet Protocol (IP) stack**, also known as TCP/IP, is a suite of popular communication protocols used in the global Internet.
- **IBM SNA** is a large, complex, feature-rich network architecture, including a protocol stack, developed in the 1970s by IBM.
- **Novell NetWare** is a network operating system (NOS) and protocol suite that provides transparent remote file access and other distributed network services.
- **AppleTalk** is a distributed client-server networking system, including a protocol stack, designed by Apple Computer.
- **DECnet** is a group of data communications products, including a protocol suite, developed by Digital Equipment Corporation.
- **OSI** protocols are a series of data networking protocols developed as an international standard by the ISO.
- **Banyan VINES** is a distributed NOS and protocol suite for personal computers using a client-server architecture.
- **XNS** (Xerox Network Systems) protocols were created by Xerox Corporation and are used across a variety of communication media.

IP & OSI are open standards where community within the Internet can make recommendations and specifications.

The rest are proprietary network architectures controlled by their respective companies.

# IP Protocol Suite

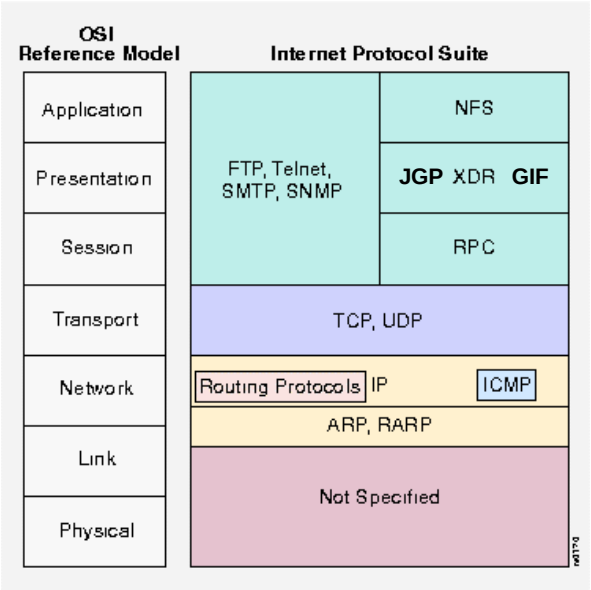


**Network File System (NFS), External Data Representation (XDR), and Remote Procedure Call (RPC)** -- These protocols combine to allow transparent access to remote network resources.

ARP (Address Resolution Protocol) – give IP address – receive the MAC address stored in ARP tables

RARP (Reverse ARP Resolution Protocol) – MAC address – receive the IP address stored in ARP tables.

# Routing – Algorithms

- The goal of a routing algorithm is to route a packet from one point in the network to another point in the network through some set of intermediate routers without "looping," a situation in which a packet is forwarded across the same link several times.
- There are two general algorithms for computing: *distance-vector* and *link-state*.

# Distance Vector Routing Protocols

- Distance Vector Algorithms are based on the "*Bellman-Ford*" Algorithm (page 172 of text).
- **RIP** – Routing Information Protocol Version 1
  - Derived from Xerox Network System's (XNS) routing protocol, which was also called RIP. It was bundled with BSD UNIX in 1982 as part of the TCP/IP protocol suite and became the de facto standard for IP routing.
- **RIPv2** - Routing Information Protocol Version 2
  - The following features were added: Authentication, Interpretation of IGP and BGP Routes, Next Hop Field, Multicasting.

RIP uses a distance-vector algorithm that determines the best route by using hop metric. When used in small, homogeneous networks, RIP is a very efficient protocol and its operation is fairly simple. RIP keeps all routing tables within a network updated by transmitting routing table update messages every 30 seconds. After a RIP-enabled device receives an update, it compares its current information with the information contained in the update message.

RIP imposes a maximum hop count of 15 – more than 15 hops away – RIP classifies the network as "unreachable." In router jargon, the destination network's cost goes to infinity.

Other strategies to resolve misinterpretations of update information are:

1. split-horizon – ensures that a router never sends routing info back in the direction in came from
2. split-horizon with poison-reverse – similar to split-horizon but routes back were it came from are sent to 15 (unreachable)
3. Hold-down – forces routers to periodically update based on set time.

# Link-State Routing Protocols

- Link-State Algorithms are based on Dijkstra's Shortest Path First Algorithm (page 174 of text).
- Link State Advertisements (LSA) are sent as updates to all other devices including names and cost-metric value of its neighbors.
- Protocols Include: OSPF (Open Shortest Path First), OSI's IS-IS, and Netware's Link Services Protocol.

Differences between OSPF vs. RIP

RIP is a DV protocol best operated in a homogeneous environment with major limitations

OSPF designed for large, heterogeneous IP networks. Allows 16-bit for metrics (very flexible & feature rich

-- more difficult to implement

# Common Circuit Speeds

DIGITAL

- DS-0: 64kbps
- DSL: 144k, 384k, 768k, 1.5M, others
- ISDN(BRI): 192kbps
- ISDN(PRI): 1.544Mbps
- T1(DS-1): 1.544Mbps
- T3(DS-3): 44.736Mbps (30 x T1)

SONET

- *OC-n: 51.84Mbps x n*
- OC-3: 155.52Mbps
- OC-12: 622.08Mbps
- OC-48: 2.49Gbps
- OC-192: 9.95Gbps

DS-0 (one channel)

ISDN(BRI) = 2xB channels (64kbps) + D channel (16kbps) + framing/error correction(~48)

ISDN(PRI) = 24xB channels (64kbps) + 8kbps (overhead)

DS-1 vs. T1?

Today they're often used interchangeably … However, the distinction is DS-1 is the bit format used for transmission on a T1 data communication link. DS-1 is a format used on copper, fiber, and broadband medium.

T1 (digital Transmission rate) is a point-to-point communication circuit that carries 24x64kbps channels that can be used for both data and digitized voice across a copper medium.

# Common WAN Technologies

- Asynchronous Transfer Mode (ATM)
- Integrated Services Digital Network (ISDN)
- Point-to-Point Protocol (PPP)
- Frame Relay
- X.25
- Switched Multimegabit Data Service (SMDS)
- High-Speed Serial Interface (HSSI)
- Synchronous Data Link Control (SDLC)

ISDN:

Integrated Services Digital Network (ISDN) refers to a set of communication protocols proposed by telephone companies to permit telephone networks to carry data, voice, and other source material. In general, ISDN provides a set of digital services that concurrently deliver voice, data, text, graphics, music, video, and information to end users. ISDN was developed to permit access over existing telephone systems. ISDN services are offered by many carriers under tariff. ISDN is generally viewed as an alternative to Frame Relay and T1 wide-area telephone services (WATS). In practical terms, ISDN has evolved into one of the leading technologies for facilitating telecommuting arrangements and internetworking small, remote offices into corporate campuses.

ISDN (BRI) = 2x64kbps (B-channel) + 16kbps (D-Channel) = 192kbps

ISDN (PRI) = 23x64kbps (B-channel) + 64kbps (D-Channel) = 1.544Mbps

PPP:

The Point-to-Point Protocol (PPP) is generally viewed as the successor to the Serial Line IP (SLIP) protocol. PPP provides router-to-router and host-to-network connections over both synchronous and asynchronous circuits.

PPP emerged in the late 1980s in response to a lack of encapsulation protocols for the Internet that was blocking growth of serial-line access. PPP was basically created to solve remote Internet connectivity problems. PPP supports a number of network layer protocols, including Novell IPX and DECnet.

Frame Relay:

Frame Relay is a high-performance wide-area network (WAN) protocol that operates at the physical and data link layers of the OSI Model. Frame Relay was originally designed for use across (ISDN) interfaces. Today, it is used over a variety of other network interfaces as well. Typical communication speeds for Frame Relay are between 56 Kbps and 2 Mbps (although lower and higher speeds are supported). Frame Relay is considerably more efficient than X.25, the protocol for which it is often considered a replacement.

X.25:

X.25 is an International Telecommunication Union Telecommunication Standardization Sector (ITU-T) protocol standard for WAN communications. The X.25 standard defines how connections between user devices and network devices are established and maintained. X.25 is designed to operate effectively regardless of the type of systems connected to the network. It is typically used in the packet switched networks (PSNs) of common carriers (the telephone companies). Subscribers are charged based on their use of the network. The development of the X.25 standard was initiated by the common carriers in the 1970s. At that time, there was a need for WAN protocols capable of providing connectivity across public data networks (PDNs). X.25 is now administered as an international standard by the ITU-T.

SMDS:

Switched Multimegabit Data Service (SMDS) is a high-speed, packet-switched, datagram-based WAN networking technology used for communication over public data networks (PDNs). SMDS addresses two important trends in WAN technology: the proliferation of distributed processing and other applications requiring high-performance networking, and the decreasing cost and high-bandwidth potential of fiber media, which can support such applications over a WAN.

SMDS can use fiber- or copper-based media. It supports speeds of 1.544 Mbps over Digital Signal level 1 (DS-1) transmission facilities, or 44.736 Mbps over Digital Signal level 3 (DS-3) transmission facilities. In addition, SMDS data units are large enough to encapsulate entire IEEE 802.3, IEEE 802.5, and Fiber Distributed Data Interface (FDDI) frames.

HSSI:

The High-Speed Serial Interface (HSSI) is a network standard for high-speed (up to 52 Mbps) serial communications over WAN links. HSSI employs a DTE/DCE interface developed by Cisco Systems and T3plus Networking. HSSI was originally offered to the ANSI EIA/TIA TR30.2 committee review. It has since been moved to the ITU-T standardization sector for acceptance.

SDLC:

The Synchronous Data Link Control (SDLC) protocol is a bit-synchronous data-link layer protocol developed by IBM Corp.

# Conclusion:

- TCP/IP Concepts: *IP Address, MAC Address, Ethernet/IEEE802.3*
- Routed vs. Routing Protocols
- Common Routed Protocols
- Review: IP Protocol Suite
- Routing Algorithms
- Common Routing Protocols: DV & LS
- Common Circuit Speeds
- Common WAN Technologies