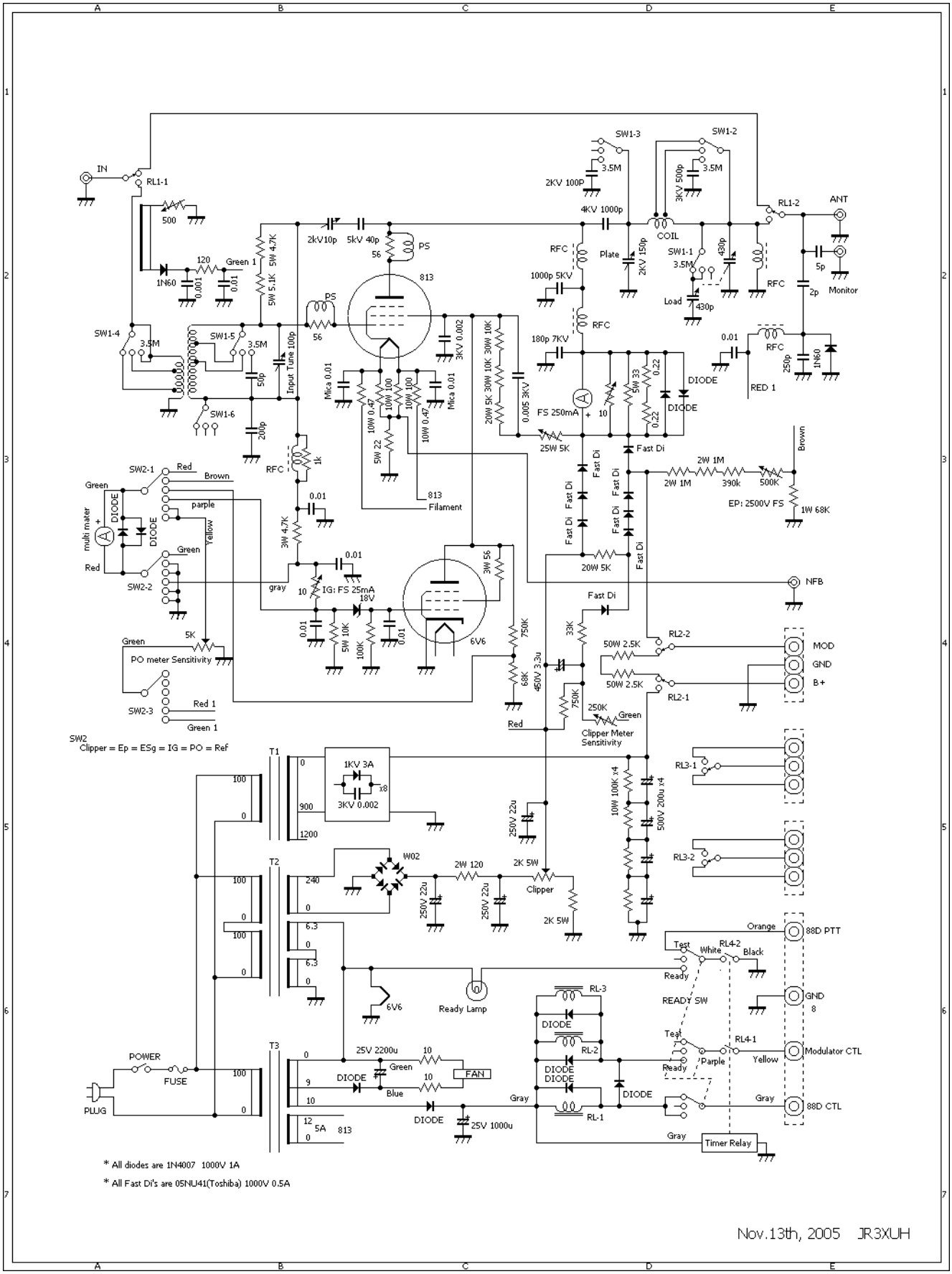

* All diodes are 1N4007 1000V 1A

* All Fast Di's are 05NU41(Toshiba) 1000V 0.5A

Nov.13th, 2005 JR3XUH